INDUSTRIAL VALVE AND ENGINEERING SUPPLIES (Pty) Ltd.(IVES)

VAT REG NO: 4280104276 CO REG NO 83/05965/07

VALVE AND ENGINEERING MERCHANT COMPANY (Pty) Ltd (VEMCO)

VAT REG NO: 4200211854 CO REG NO 1979/002851/07

Branch :	Address :	Tel :	Fax :	E - Mail :
Head Office:	114 Plane Road,Spartan,Gauteng	27-11-394-2066(21 lines)	27-11-394-2476	industrialvalve@futurejhb.co.za
Durban:	Unit 1.5 Canberra Park, Canberra Road, Umbilo	27-31-205-0218	27-31-205-0210	iveskzn@futurejhb.co.za
Cape Town:	Unit 14 Silver Park,Silver Street,Brackenfell	27-21-982-0302	27-21-982-0302	ivesct@industrialvalve.co.za

7778IFMG Ductile Iron 300 PSI Monitored Butterfly Valve Grooved Pattern

65 - 150 NB

Signal Switch Specification:
1) Rating: IBC IP40
2) Type: RV-162-1C25

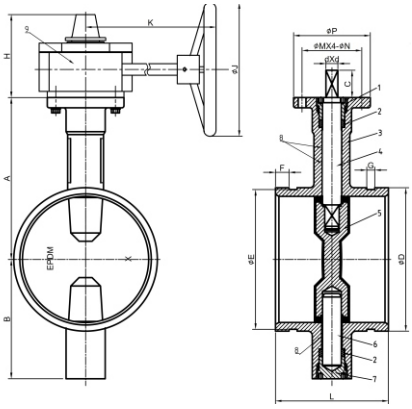

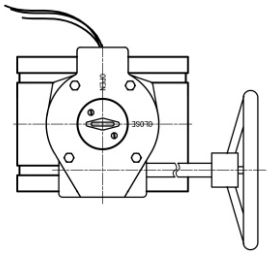

SIZE	A	B	C	D	E	F	G	H	K		J	P	M	N	d	L
2.5"	125	95	32	73 76.1	69.1 72.3	15.9	7.9	111	153	218	152	90	70	9	10	96.4
3"	140	100	32	88.9	84.9	15.9	7.9	111	153	218	152	90	70	9	11	97
4"	160	100	32	114.3	110.1	15.9	9.5	111	153	218	152	90	70	9	14	115.1
5"	170	125	32	139.7 141.3	135.5 137	15.9	9.5	111	153	218	152	90	70	9	14	132.4
6"	190	140	32	165.1 168.3	160.9 164	15.9	9.5	111	153	218	200	90	70	9	16	132.4

NO	Name	Material	Remark
9	Gear Box		
8	Steam Bushing	PTFE	ASTM D4894
7	Lower Shaft Sealing Nut	WCB	ASTM A216
6	Lower Shaft	SS416	ASTM A582
5	Disc	DI-EPDM	
4	Upper Shaft	SS416	ASTM A582
3	Body	DI	ASTM A536
2	Shaft Seal	EPDM	ASTM D2000
1	Upper Shaft sealing Nut	WCB	ASTM A216

Size	Unit Weight Kg
2"	6.96
21/2"	7.71
3"	8.20
4"	9.65
5"	12.69
6"	15.94
8"	25.76
10"	36.43
12"	48.34

All Specifications are subject to change without notice

Break Away VALVES

TECHNOLOGY AT ITS BEST

Complete